Introducing Senior Undergraduate Students to the Open-Circuit Time-Constant Method for Circuit Analysis

Nikolaos F. Voudoukis*, Dimitrios Baxevanakis†, Konstantinos Papafotis‡, Christos Dimas§, Costas Oustoglou¶ and Paul P. Sotiriadis‖
Department of Electrical and Computer Engineering
National Technical University of Athens, Greece
Email: *nvoudoukis@mail.ntua.gr, †dimbaxev@central.ntua.gr, ‡kpapafotis@central.ntua.gr,
§chdim@central.ntua.gr, ¶costasoustoglou@mail.ntua.gr, ‖pps@ieee.org

***Abstract*—Open-circuit time-constant (OCTC) method is an approximate analytical method to estimate the 3 dB bandwidth of baseband circuits. Considerable saving in computational effort is achieved since a full analysis of the circuit is not required. The paper focuses on teaching and illustrating OCTC to senior undergraduate students. Two examples are presented to highlight the benefits gained by the approximate analysis technique and the perception of the students on the subject.**

***Index Terms*—open-circuit time-constant (OCTC), 3 dB bandwidth, −3 dB frequency, amplifiers, LTspice**

I. Introduction

Analog circuit design depends on analysis providing qualitative and quantitative information on how we can improve circuit performance by modifying the topology and parameters. Identifying the source of a problem is a key aspect of design, since it highlights the critical parts of the circuit and suggests what kind of modification will improve it. Some of the early works in this area recognized this need [1].

A good approximate analysis tool for the estimation of the $-3\,\mathrm{dB}$ frequency ($f_{-3\,\mathrm{dB}}$) of amplifiers is the open-circuit time-constant (OCTC) technique, first introduced in the mid-1960's [2]. It is applied mainly to wide-bandwidth, baseband multistage amplifiers. The technique allows us to estimate the bandwidth of a system almost by inspection, and sometimes with surprisingly good accuracy. More importantly, and unlike typical circuit simulation programs, the OCTC method identifies which elements are responsible for bandwidth limitation. The great value of this property is that an analytical expression of the circuit's transfer function is not required.

Finding the $3\,\mathrm{dB}$ bandwidth of a circuit can be a difficult task in general. A circuit that contains more than two capacitors can be cumbersome to handle analytically, whereas the expressions themselves become too complicated to provide meaningful insight on possible improvements [3].

The remainder of this paper is organized as follows. Section II presents the OCTC method principle and Section III outlines its application steps in circuits. Section IV demonstrates two teaching examples where OCTC is used alongside simulation for bandwidth estimation. Finally, Section V concludes this work.

II. OCTC Principles

The OCTC or zero-value time-constant analysis [3] is an approximate method to estimate the dominant pole (and thus the $f_{-3\,\mathrm{dB}}$) of baseband amplifiers. The basis of the method is the approximation that the $f_{-3\,\mathrm{dB}}$ of the amplifier is determined by the dominant denominator term of its transfer function. This approximation can may be inaccurate in cases where a zero in the numerator is near the frequency of the aforementioned pole. The method employs a simplified way for finding the 1st-order approximation by summing the RC-products for each capacitor in the circuit. The resistance R for a selected capacitor is the resistance seen by it when all other capacitors are removed. All of the decoupling and ac-coupling capacitors are effectively short circuits.

For any circuit we can derive a transfer function $F(s)$ by means of small-signal analysis that has the general form [4]:

$$\begin{aligned} F(s) &= A\frac{(1-\frac{s}{z_1})(1-\frac{s}{z_2})\dots(1-\frac{s}{z_m})}{(1-\frac{s}{p_1})(1-\frac{s}{p_2})\dots(1-\frac{s}{p_n})} \\ &= A\frac{1-s(\frac{1}{z_1}+\frac{1}{z_2}\dots\frac{1}{z_m})+H.O.T.(s)}{1-s(\frac{1}{p_1}+\frac{1}{p_2}\dots\frac{1}{p_n})+H.O.T.(s)} \\ &\simeq A\frac{1-s(\frac{1}{z_1}+\frac{1}{z_2}\dots\frac{1}{z_m})}{1-s(\frac{1}{p_1}+\frac{1}{p_2}\dots\frac{1}{p_n})} \\ &\simeq \frac{A}{1-\frac{s}{p_1}} \end{aligned} \tag{1}$$

Higher order terms ($H.O.T.$) of s can be neglected supposing circuit operation in relatively low frequencies. A crucial assumption being is the existence of a dominant pole, in a much lower frequency than any other pole or zero:

$$|p_1| \ll |p_2|, |p_3| \dots |p_n|, |z_1|, |z_2| \dots |z_m| \tag{2}$$

The dominant pole can then be approximated as:

$$p_1 \simeq -\frac{1}{T_1+T_2+\dots+T_n} \tag{3}$$

978-1-7281-1184-1/19/$31.00 ©2019 IEEE

The total time-constant is defined as:

$$T = T_1 + T_2 + \cdots + T_n = R_{C_1}C_1 + R_{C_2}C_2 + \cdots + R_{C_n}C_n \quad (4)$$

T_i, $i = 1, 2, \ldots n$ is the time-constant of the i-th capacitor. R_{C_i}, $i = 1, 2, \ldots n$ is the effective (Thévenin) resistance across the i-th capacitor terminals with: a) all of the other capacitors (parasitic and intrinsic device capacitances) open-circuited, and b) all of the decoupling and ac-coupling capacitors short-circuited in the small-signal model of the circuit in inspection. So, the resulting $f_{-3\,\mathrm{dB}}$ is:

$$f_{-3\,\mathrm{dB}}^{\mathrm{OCTC}} \simeq \frac{1}{2\pi T} \quad (5)$$

The advantage of OCTC is not only to derive the $f_{-3\,\mathrm{dB}}$ but also to identify which R, C or g_m effectively limits its value. The method should be treated more as a design tool than a reliable technique for accurate calculations. OCTC is not accurate if: a) assumption (2) is violated, b) in the case of parallel signal paths, or c) if there are inductors present.

III. Applying The Method

Consider an arbitrary linear network comprised only of resistors, voltage and current sources (independent or linearly dependent) and capacitors. To apply the OCTC method, derive the small-signal model of the circuit (including the parasitic capacitances of the transistor models) and:

1) Select the i-th capacitor, C_i, and remove all others. All decoupling and ac-coupling capacitors are short-circuited.
2) Zero all independent sources (i.e, short-circuit all independent voltage sources and open-circuit all independent current sources).
3) Find the resistance R_{C_i} seen by the i-th capacitor. This can be done either by inspection or by replacing C_i with a test current source I_x, determining the voltage V_x between its terminals, and calculating $R_{C_i} \equiv \frac{V_x}{I_x}$ (or, equivalently, by applying a voltage source V_x and finding the current I_x drawn from it).
4) Repeat steps 1-3 for $i = 1, 2, \ldots n$.
5) Calculate T using (4).
6) Define the $f_{-3\,\mathrm{dB}}$ using (5).

The OCTC method typically gives a conservative, estimate for $f_{-3\,\mathrm{dB}}$. The dominant term in (4) corresponds to the pair of $R_{C_i}C_i$ which limits the overall bandwidth [4].

A. Some Observations and Interpretations

The OCTC method is relatively simple to apply because each time-constant calculation involves the computation of a single resistance value. The computation effort required is typically substantially less than that needed for an exact solution.

The greatest value of the technique lies in the identification of those elements involved in bandwidth limitations, that is, the ones whose associated open-circuit time-constants dominate the sum in (4). This knowledge can guide the designer to perform appropriate modifications in circuit values or even suggest topological changes. In contrast, SPICE and other simulators only provide a numerical value for the bandwidth while conveying little or nothing about what the designer can do to alter the performance in a desired direction.

The above can be intuitively viewed as follows. The reciprocal of each i-th open-circuit time-constant is the bandwidth that the circuit would exhibit if the i-th capacitor was the only capacitor in the circuit. Thus, each time-constant represents a local bandwidth degradation term. The method of OCTC states that the linear combination of these individual, local limitations yields an estimate of the total bandwidth.

B. Small-Signal Equivalent Circuit – A Frequent Form

The open-circuit time-constants for the circuit are determined by calculating the resistance seen by each capacitor between its terminals. Significant effort can be saved by recognizing that during an OCTC analysis some capacitors result in configurations similar to Fig. 1. The resistance R is:

$$R = R_A + R_B + g_m R_A R_B \quad (6)$$

Resistances R_A and R_B may be actual, or equivalent, representing the total resistance seen at the corresponding nodes.

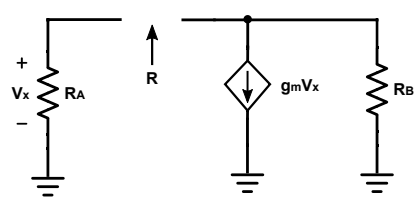

Fig. 1. A Frequent Form for calculating the Resistance R.

IV. Teaching Examples

The OCTC method is introduced in Electronics III course to senior undergraduate students at the Electrical and Computer Engineering School of the National Technical University of Athens [4]. The course contains a 4-hour module on the OCTC method. The number of students participating in this study was 115. We present two practical examples which are given as homework problems. Students are asked to solve the two problems analytically by hand (as exam problems) [5] and to simulate them in LTspice, comparing the simulation results with the theoretical results. For the problems it is given that [4]:

$$C_\mu = \frac{C_{jc0}}{\left(1 + \frac{V_{CB}}{V_{0C}}\right)^m}, \quad \text{and} \quad C_\pi = C_{de} + C_{je}$$

where

$$C_{de} = \tau_f g_m, \quad \text{and} \quad C_{je} = 2C_{je0}$$

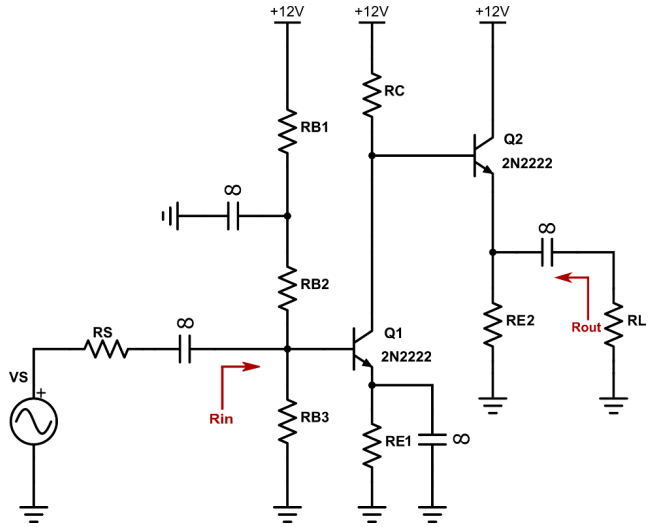

Fig. 2. Circuit of the 1st Problem.

A. Problems

1) Problem 1: Consider the circuit in Fig. 2. Let $V_{BE} = 0.7\,\mathrm{V}$, $V_T = 25\,\mathrm{mV}$, $R_{B_1} = 30\,\mathrm{k\Omega}$, $R_{B_2} = 6\,\mathrm{k\Omega}$, $R_{B_3} = 12\,\mathrm{k\Omega}$, $R_{E_1} = 2.3\,\mathrm{k\Omega}$, $R_C = 4\,\mathrm{k\Omega}$, $R_{E_2} = 1.8\,\mathrm{k\Omega}$, $R_S = 1\,\mathrm{k\Omega}$ and $R_L = 1\,\mathrm{k\Omega}$.

a) For the 2N2222 assume: $\beta = 200$, $C_{jc0} = 8\,\mathrm{pF}$, $V_{0C} = 0.7\,\mathrm{V}$, $m = 0.3$, $C_{je0} = 25\,\mathrm{pF}$, $\tau_f = 400\,\mathrm{ps}$. Ignore the Early phenomenon ($r_o = \infty$). Applying the OCTC method estimate the $f_{-3\,\mathrm{dB}}^{\mathrm{OCTC}}$ frequency and so the bandwidth of the amplifier.

b) Using LTSpice, sketch the Bode plot of the amplifier for the frequency range 1 Hz-500 MHz. Determine the $f_{-3\,\mathrm{dB}}$ and so the bandwidth of the amplifier.

2) Problem 2: We modify the circuit of Problem 1, adding Q_3 and converting the common-emitter stage to a cascode stage as depicted in Fig. 3. The tasks remain the same.

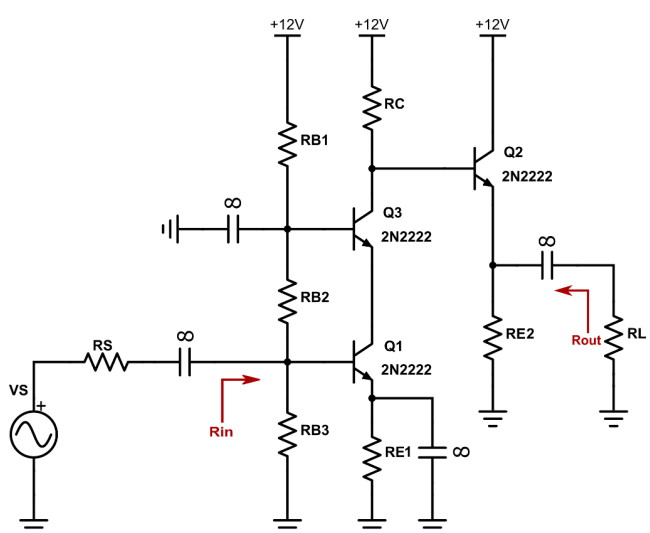

Fig. 3. Circuit of the 2nd Problem.

B. Solutions, Simulations and Results

From the given data, students are able to calculate V_{CB} and g_m, thus determining the values of C_μ and C_π.

1) Problem 1: The results of the analytical solution are the following:

$C_{\mu 1} = 4.25\,\mathrm{pF}$	$C_{\pi 1} = 65.62\,\mathrm{pF}$
$C_{\mu 2} = 4.52\,\mathrm{pF}$	$C_{\pi 2} = 114.7\,\mathrm{pF}$
$R_{C_{\mu 1}} = 109.41\,\mathrm{k\Omega}$	$R_{C_{\pi 1}} = 691.95\,\Omega$
$R_{C_{\mu 2}} = 3.88\,\mathrm{k\Omega}$	$R_{C_{\pi 2}} = 42.69\,\Omega$

The $f_{-3\,\mathrm{dB}}$ of the circuit can now be estimated by calculating the associated zero-value time-constants:

Time-Constant	**ns**
$R_{C_{\mu 1}} C_{\mu 1}$	465.11
$R_{C_{\mu 2}} C_{\mu 2}$	45.41
$R_{C_{\pi 1}} C_{\pi 1}$	17.55
$R_{C_{\pi 2}} C_{\pi 2}$	4.90
T	532.97

OCTC: $f_{-3\,\mathrm{dB}}^{\mathrm{OCTC}} = 298.62\,\mathrm{kHz}$

Simulation: $f_{-3\,\mathrm{dB}}^{\mathrm{LTspice}} = 327\,\mathrm{kHz}$

The estimated $f_{-3\,\mathrm{dB}}$ frequency is close to the one given by LTSpice simulation.

In this example the major limitation of the circuit frequency response comes from the time-constant associated with the collector-base junction capacitance $C_{\mu 1}$ of Q_1. This is due to Miller effect of $C_{\mu 1}$.

2) Problem 2: The results of the analytical solution are found to be:

$C_{\mu 1} = 6.38\,\mathrm{pF}$	$C_{\pi 1} = 65.37\,\mathrm{pF}$
$C_{\mu 2} = 4.54\,\mathrm{pF}$	$C_{\pi 2} = 115.09\,\mathrm{pF}$
$C_{\mu 3} = 4.62\,\mathrm{pF}$	$C_{\pi 3} = 65.3\,\mathrm{pF}$
$R_{C_{\mu 1}} = 1.41\,\mathrm{k\Omega}$	$R_{C_{\pi 1}} = 693.4\,\Omega$
$R_{C_{\mu 2}} = 3.88\,\mathrm{k\Omega}$	$R_{C_{\pi 2}} = 42.45\,\Omega$
$R_{C_{\mu 3}} = 3.88\,\mathrm{k\Omega}$	$R_{C_{\pi 3}} = 26.02\,\Omega$

Time-Constant	**ns**
$R_{C_{\mu 1}} C_{\mu 1}$	9.01
$R_{C_{\mu 2}} C_{\mu 2}$	45.33
$R_{C_{\mu 3}} C_{\mu 3}$	17.60
$R_{C_{\pi 1}} C_{\pi 1}$	4.89
$R_{C_{\pi 2}} C_{\pi 2}$	17.95
$R_{C_{\pi 3}} C_{\pi 3}$	1.70
T	96.48

OCTC: $f_{-3\,\mathrm{dB}}^{\mathrm{OCTC}} = 1.65\,\mathrm{MHz}$

Simulation: $f_{-3\,\mathrm{dB}}^{\mathrm{LTspice}} = 2.4\,\mathrm{MHz}$

The estimated $f_{-3\,\mathrm{dB}}$ differs significantly in this case to the value obtained by LTSpice simulation.

In this example, the time-constant associated with the emitter-base junction capacitance $C_{\pi 1}$ of Q_1 are the major contributor to the $f_{-3\,\mathrm{dB}}$ of the circuit.

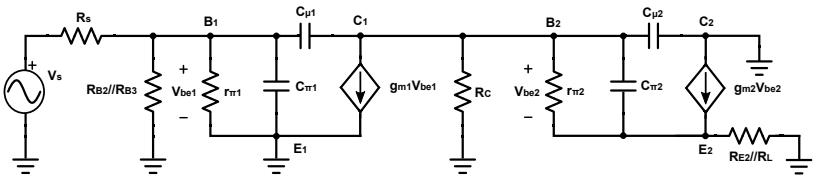

Fig. 4. Small-Signal Equivalent Circuit for the 1st Problem.

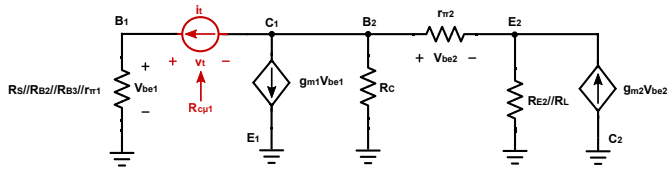

Fig. 5. Small-Signal Equivalent Circuit for $R_{C_{\mu 1}}$ (1st Problem).

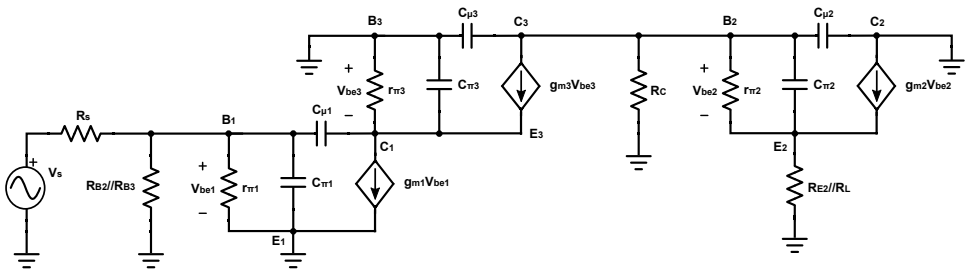

Fig. 6. Small-Signal Equivalent Circuit for the 2nd Problem.

C. Students' Performance

Out of the 115 students, 82 ($\simeq 70\%$) answered Problem 1 correctly. The wrong calculation of the resistances seen across the terminals of the capacitors (Fig. 4, 5) was the main failure of those who answered wrongly [6]. This was due to deriving an incorrect small-signal equivalent circuit initially ($\simeq 7\%$ of the students), or incorrect equivalent circuit transformations during steps 1-4 of the OCTC method ($\simeq 15\%$ of the students) and wrong mathematical calculations at steps 5-6 ($\simeq 5\%$ of the students).

In Problem 2, 63 students (a little over 50%) answered correctly. In this problem we were interested in exploring how well students could understand (and predict) the bandwidth behavior of a circuit slightly modified (Fig. 6) in comparison to an already known (Fig. 4). By cascoding the first stage, we minimize the Miller effect that multiplies the effective value of $C_{\mu 1}$. Students experienced more difficulties in deriving the small-signal equivalent circuit ($\simeq 12\%$ of the students). Some ($\simeq 15\%$) failed to apply steps 1-4 of the OCTC method. A number of students ($\simeq 12\%$) did not complete the solution or failed in mathematical calculations ($\simeq 5\%$).

Students who used the frequent form of Fig. 1 solved the problems easier and ended up with the correct solution. Most of the students who didn't use it were confused, found wrong solutions or didn't complete the problem. The last ones were mainly students who missed some (or all) of the OCTC lectures or did not devote the necessary time to prepare (the same observation applies in the case of Problem 1).

V. Conclusions

Introducing senior undergraduate students to OCTC method for circuit analysis and design, a way to understand that is quite fruitful to use methods that are reasonably simple to apply, even if they yield answers that approximate the results in question. Simulators can then be used to provide a final quantitative verification [7].

Our findings indicate that a combination of interactive lecture demonstrations, laboratory activities with simulations and in-class tutorials help students to evaluate the role of an approximate calculation in relation to a simulation program for circuit analysis and design.

References

[1] J. H. Mulligan, "The effect of pole and zero locations on the transient response of linear dynamic systems," *Proceedings of the IRE*, vol. 37, no. 5, pp. 516–529, May 1949.

[2] Thornton, R.D., C. L. Searle,, D. O. Pederson, R. B. Adler, and E. J. Angelo, Jr, *Multistage Transistor Circuits*. John Wiley & Sons, Inc., 1965.

[3] P. Gray, P. Hurst, S. Lewis, and R. Meyer, *Analysis and Design of Analog Integrated Circuits*, 5th ed. John Wiley & Sons, Inc., 2009.

[4] Paul P. Sotiriadis, "Lecture notes on Electronics III," National Technical University of Athens.

[5] N. Voudoukis and G. Pagiatakis, "Operational amplifiers teaching and students' understanding," *IEEE Global Engineering Education Conference (EDUCON)*, April 2017.

[6] N. F. Voudoukis and G. Pagiatakis, "Students' misconceptions in telecommunications," *ISNITE2015 International Symposium*, September 2015.

[7] M. D. Tortoreli, G. E. Chatzarakis, N. F. Voudoukis, G. K. Pagiatakis, and A. E. Papadakis, "Teaching fundamentals of photovoltaic array performance with simulation tools," *International Journal of Electrical Engineering Education*, June 2016.